M100002321.SchDoc

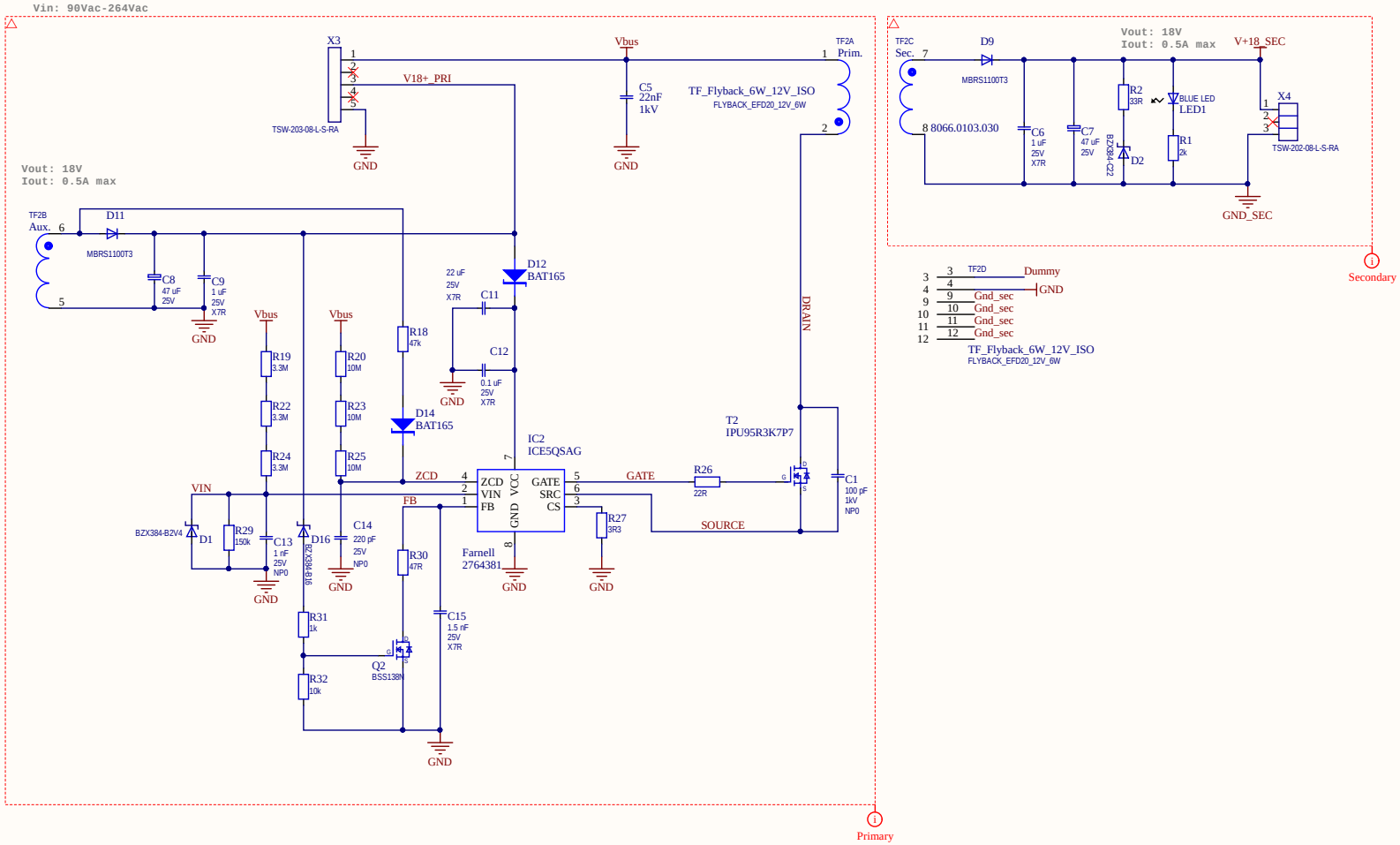

Title			
Variant	[No Variations]	Approved	<Appr.>
Size: A3	Document Name M100002321.SchDoc	Rel.	Rev.
Author:			
Date: 22.11.2019 Time: 09:46:16	SVN Revision:		
		Sheet	of